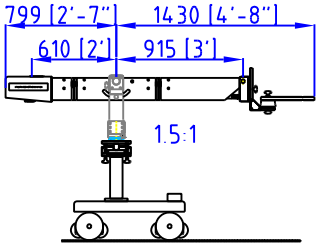
799 [2'-7"]
1430 [4'-8"]
610 [2']
915 [3']
1.5:1

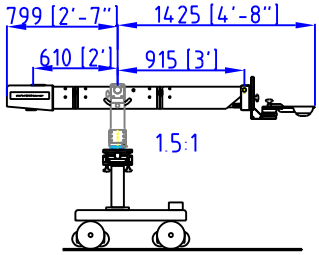
799 [2'-7"]
1425 [4'-8"]
610 [2']
915 [3']
1.5:1

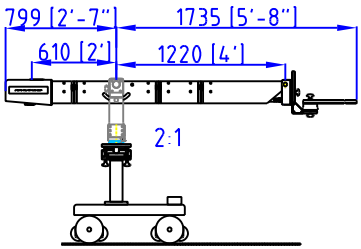
799 [2'-7"]
1735 [5'-8"]
610 [2']
1220 [4']
2:1

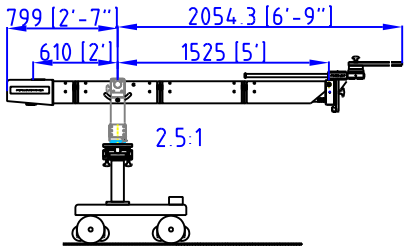
799 [2'-7"]
2054.3 [6'-9"]
610 [2']
1525 [5']
2.5:1

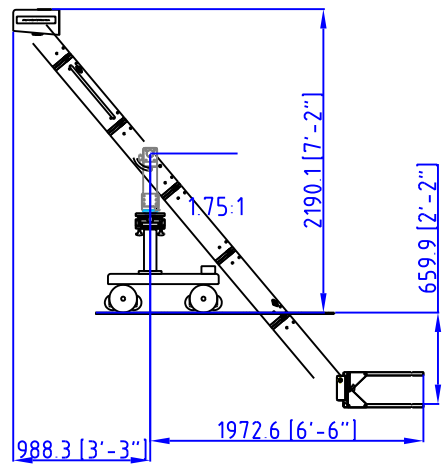
1.75:1
2190.1 [7'-2"]
659.9 [2'-2"]
988.3 [3'-3"]
1972.6 [6'-6"]

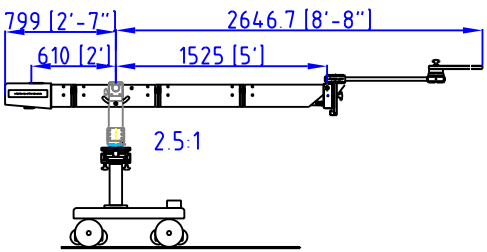
799 [2'-7"]
2646.7 [8'-8"]
610 [2']
1525 [5']
2.5:1

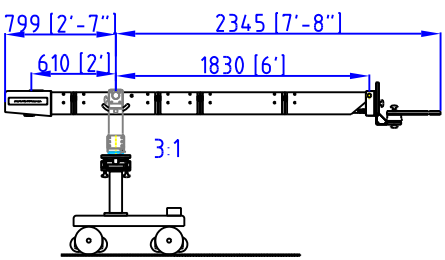
799 [2'-7"]
2345 [7'-8"]
610 [2']
1830 [6']
3:1

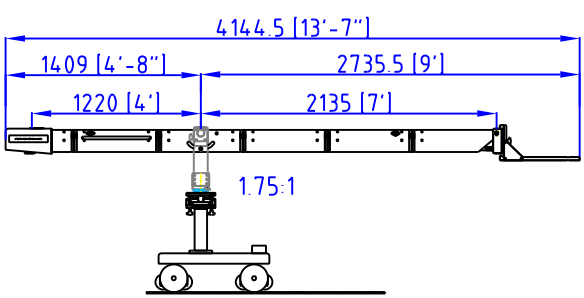
4144.5 [13'-7"]
1409 [4'-8"]
2735.5 [9']
1220 [4']
2135 [7']
1.75:1

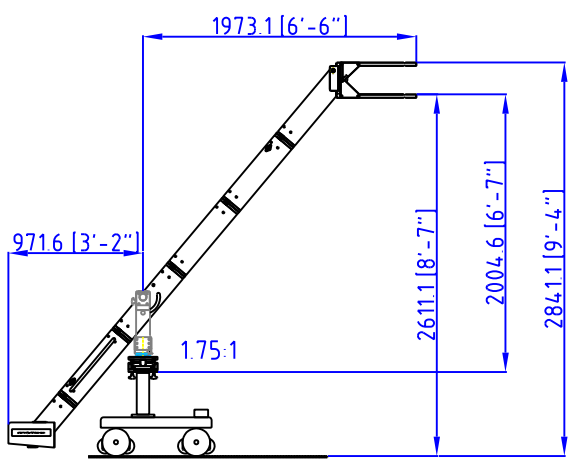
1973.1 [6'-6"]
971.6 [3'-2"]
1.75:1
2611.1 [8'-7"]
2004.6 [6'-7"]
2841.1 [9'-4"]